A1

DETAIL 'A' – TYPICAL UTILITY METER 'GOSSIP–WALL' ARRANGEMENT.

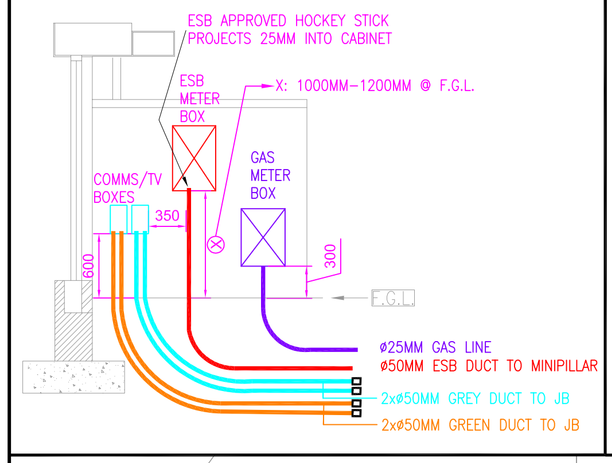

THE ABOVE IS FOR GUIDANCE – CONFIRMATION OF UTILITY INSTALLATION REQUIREMENTS TO BE CONFIRMED BY LOCAL AREA SUPERVISORS

MINIMUM SERVICES CLEARANCES:

- WATER SERVICE PIPEWORK – MAINS MINIM GROUND COVER 900mm; SERVICE PIPES MINIMUM COVER OF 600mm.
- GAS PIPEWORK MINIMUM GROUND COVER – 750mm IN ROADWAYS OR GRASSED AREAS – 600mm IN OTHER PAVED AREAS – WARNING TAPE OVER
- TELECOM DUCTS MINIMUM GROUND COVER – 750mm IN ROADWAY; 450mm IN PATHWAY – WARNING TAPE AT 150mm OVER DUCTS.
- ESB LT CABLE DUCT MINIMUM GROUND COVER – 900mm (WITH 150mm LEAN MIX CONCRETE OVER IN ROADWAYS AND PRIVATE PROPERTY).
  – 450 MINIMUM COVER UNDER PATHS.
- ESB HT CABLE DUCT MINIMUM GROUND COVER – 1,000mm (WITH 150mm LEAN MIX CONCRETE OVER IN ROADWAYS AND PRIVATE PROPERTY).
- TELECOM CABLES/DUCTS / CROSSOVER WATER, GAS, DRAINAGE, SEWERAGE SERVICES – 150mm.
- TELECOM CABLES/DUCTS / PARALLEL WATER, GAS, DRAINAGE, SEWERAGE SERVICES – 300mm
- ESB HT OR LT CABLES / WATER, DRAINAGE, SEWERAGE SERVICES – 230mm
- ESB LT CABLING / CROSSOVER TELECOM CABLES/DUCTS – 300mm WITH 50mm CONCRETE SLAB BETWEEN
- ESB HT CABLING / CROSSOVER TELECOM CABLES/DUCTS – 300mm WITH 75mm CONCRETE SLAB BETWEEN
- ESB LT CABLING / PARALLEL TELECOM CABLES/DUCTS – 200mm
- ESB HT CABLING / PARALLEL TELECOM CABLES/DUCTS – 300mm
- A MINIMUM SEPARATION OF 2m IS REQUIRED BETWEEN ESB MINIPILLARS AND PUBLIC LIGHTING POLES OR MICROPILLARS

SECTION OF DISPOSITION OF MAINS IN WALKWAYS

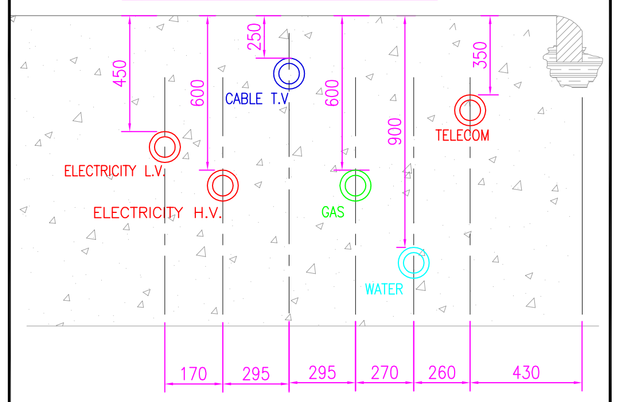

TYPICAL TRENCH DETAIL – SCALE = NTS
SEPARATION DISTANCES TO BE CONFIRMED WITH SERVICE PROVIDERS SEPARATION DISTANCES

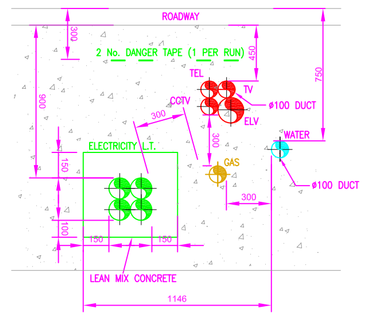

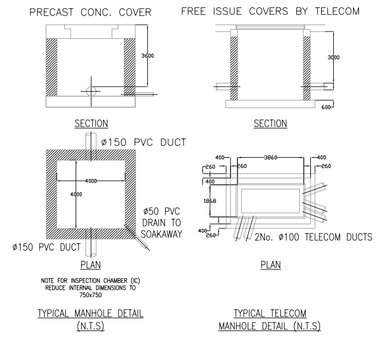

LEGEND

- TV — GREEN CATV DUCTS ø110mm MAINS TO CHAMBERS AND 50mm FROM CHAMBERS TO ETU'S
- TEL — GREY TELECOM DUCTS ø110mm MAINS TO CHAMBERS AND 50mm FROM CHAMBERS TO ETU'S
- OHL — EXISTING EIR OHL TO BE DIVERTED
- CATV — EXISTING CATV LINE
- MANHOLE FOR DRAWING WIRES, ACCESS AND MAINTENANCE.
- En — TELECOM JB "n"
- Vn — CATV JB "n"
- G — 2xø50mm GREY DUCT TO JB "n"
- G — 2xø50mm GREEN DUCT TO JB "n"

Status: INFORMATION

© HAYES HIGGINS PARTNERSHIP

Referenced drawings	
Dwg No.	Dwg Title

Issue register					
Rev.	Date	Description	Dwn.	Chkd.	Appvd.
P1	25/07/19	INFORMATION	HP	AW	AW

NOTES:

1. THIS DRAWING TO BE READ IN CONJUNCTION WITH ALL RELEVANT ARCHITECTS, C&S ENGINEERS DRAWINGS & SPECIFICATIONS.
2. ALL WORKS TO BE CARRIED OUT IN ACCORDANCE WITH THE RELEVANT BUILDING REGULATIONS.
3. DO NOT SCALE – WORK TO FIGURE DIMENSIONS ONLY.

IHEEM

Qualitas Veritas ISO 9001-2015

ENGINEERS IRELAND cpd ACCREDITED COMPANY

Drawing Title: PROPOSED SITE SERVICES TELECOM LAYOUT

Date:	Scale:	
xx/03/19	1:400@A1 (1:800@A3)	
Drawn By: H.P.	Checked By: A.W.	Approved By: A.W.

Client: KILKENNY COUNTY COUNCIL

Job Description: HOUSING DEVELOPMENT AT CROKER'S HILL, KENNYSWELL ROAD, KILKENNY CITY

Project No:	Drawing Ref:	Rev:
18ME002	ME–1000(B)	P1

Hayes Higgins Partnership
Gas House Lane, Kilkenny.
Gas House Lane, Kilkenny (056) 7764710 (056) 7723323 info@hayeshigginskk.com
The Glass House, 11 Oake Lane, Smithfield, Dublin 7 (01) 6612321 admin@hayeshiggins.ie

CADFILE: 18ME002–ME–1000.dwg