Kilkenny County Council

Vicar Street Improvement Development

Vicar Street - Report of Particulars of Proposed Development

KILGALLEN & PARTNERS
CONSULTING ENGINEERS

KILKENNY COUNTY COUNCIL **Kilkenny County Council** **County Hall,** **John Street,** **Kilkeny**	**19022-P8-RPT** **Issue PL1**	**Kilgallen & Partners** Consulting Engineers 3 Danville Business Park, Kilkenny Tel : 056 7701090 Email : info@kilgallen.ie Web : www.kilgallen.ie

REVISION HISTORY

Client	Kilkenny County Council
Project	Vicar Street Improvement Development
Title	Vicar Street - Report of Particulars of Proposed Development

Date	Detail of Issue	Issue No.	Origin	Checked	Approved
12/08/2020	Issued for Part 8 Planning	PL1	PB	PB	KS

TABLE OF CONTENTS

1. INTRODUCTION

In accordance with Part XI, Section 179 of the Planning and Development Act 2000 as amended, and Part VIII, Article 80 & 81 of the Planning and Development Regulations 2001 as amended, Kilkenny County Council has given notice of its intention to carry out development comprising improvement works to Vicar Street, Kilkenny ('the Development').

This report is prepared for inclusion with the Plans and Particulars being made available for public inspection in accordance with the above Act and Regulations. It describes the need for and objectives of the Development and provides a detailed description of the Development.

This report is to be read in conjunction with the following drawings which show details of the proposed Development and which, along with this Report, will also be made available for public inspection:

Drg. No	Title
19022-P8-000	Cover & Index of Contents
19022-P8-001	Site Location Map
19022-P8-002	Existing Site Layout
19022-P8-100	General Plan Layout Showing Extent of Works
19022-P8-101	General Services Layout

Table 1 Schedule of Drawings Accompanying Report

2. VICAR STREET

2.1 VICAR STREET – CONTEXT

Vicar Street is a short street that acts as a link between the centre of Kilkenny, primarily via Irishtown, with the northern outskirts and the rural settlements beyond.

Figure 2.1 shows Vicar Street in context.

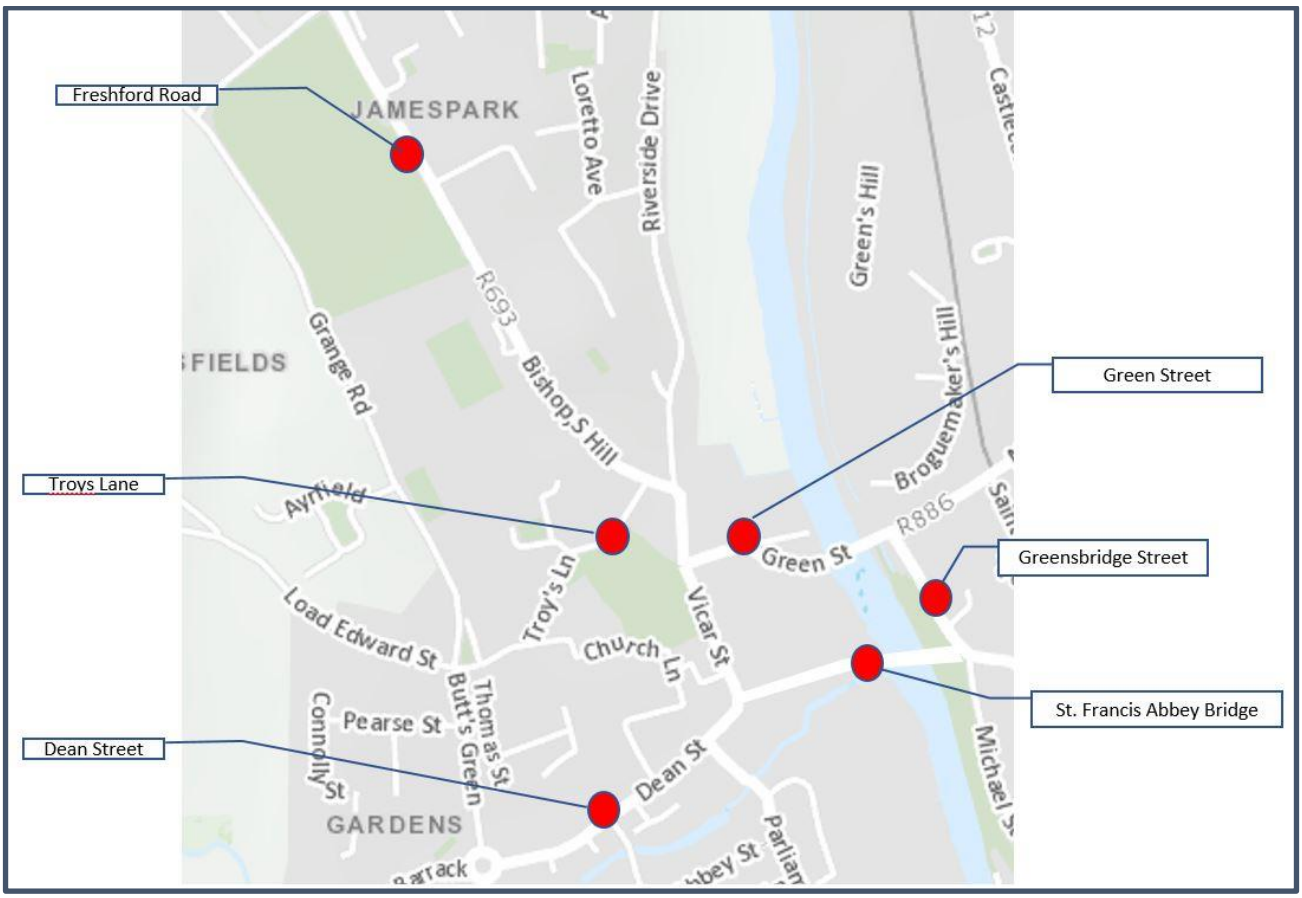

Figure 2.1 Vicar Street in Context

2.2 VICAR STREET – DESCRIPTION

Vicar Street is a short street, only 150m long, connecting St. Canice's Place to Troy's Gate / Green Street with an average daily traffic flow of 5,270.

The cross-section comprises a two-way carriageway with a footway on each side. The carriageway width is typically 5.3m, but reduces to 5.0m at locations; footway widths are typically 1.2m but reduce to 1.0m at critical locations on the southern half of Vicar Street in the vicinity of Common Hall Lane. The distance between building lines increases at the northern half of Vicar Street, allowing for the provision of approximately 11no. parallel-parking bays, primarily used as resident parking.

Viewed from north to south, the right hand side of Vicar Street is flanked by the boundary of Bishop's Palace, delineated by a high wall, and by terraced housing. The left hand side is flanked primarily by terraced housing but also by the Kilkenny Inn, which has an access on to Vicar Street. Typically, the building line on both sides of Vicar Street is tight to the edge of footway.

At its northern end, Vicar Street has a junction with Troy's Gate and Green Street. The junction is controlled by a mini-roundabout. The geometry of the mini-roundabout is such that the junction is open and traffic movements are not clearly defined, leading to inappropriately high speeds through the junction, conflict between traffic movements and in particular a junction that is not safe for cyclists.

At its southern end, Vicar Street has a junction with St. Canice's Place. This is a priority junction and includes a reserve lane for traffic turning right off St. Francis Bridge on to Vicar Street.

A 30 km/h speed limit and 3.5 tonne weight restriction is in place on Vicar Street.

Figure 2.2 shows a typical view of Vicar Street. A general layout for existing Vicar Street is included with the drawings made available with this report.

Figure 2.2 Typical View of Vicar Street

2.3 Vicar Street – Traffic Flows

An automated traffic survey was carried out over two weekdays in May 2019. The average daily flows recorded during the survey are summarised in Table 2.1. The findings of this survey will be discussed in greater detail in Section 5.

	Bicycle	Cars and Light Goods Vehicles	Heavy Goods Vehicles / Large Public Service Vehicles
Inbound	56	2,181	76
Outbound	57	2,944	69
Total	113	5,125	145

Table 2.1 Average Daily Traffic Flow on Vicar Street

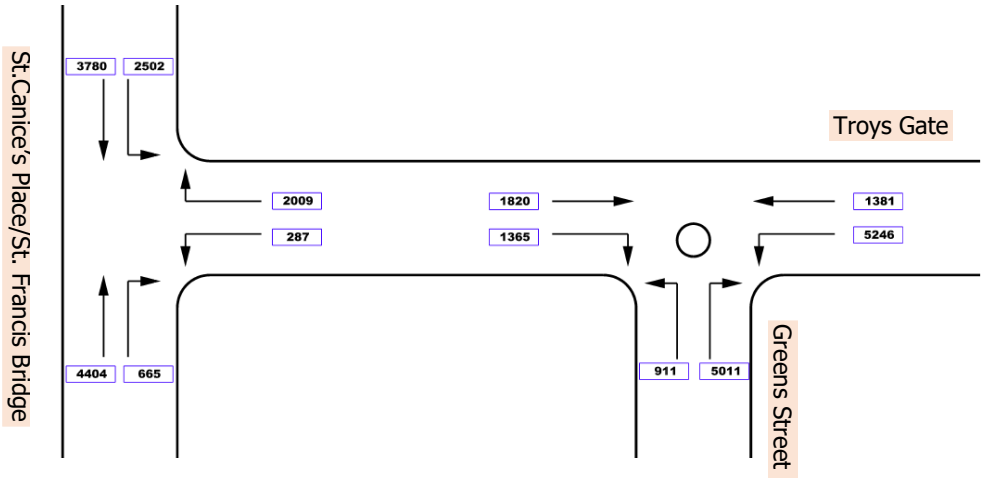

Figure 2.3 Average Daily Passenger Car Units on Vicar Street

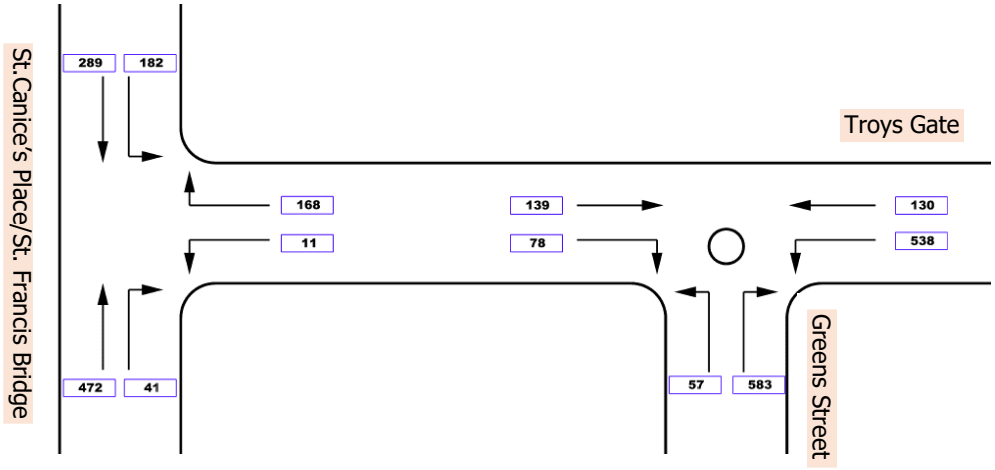

Figure 2.4 Average Peak AM Passenger Car Units on Vicar Street

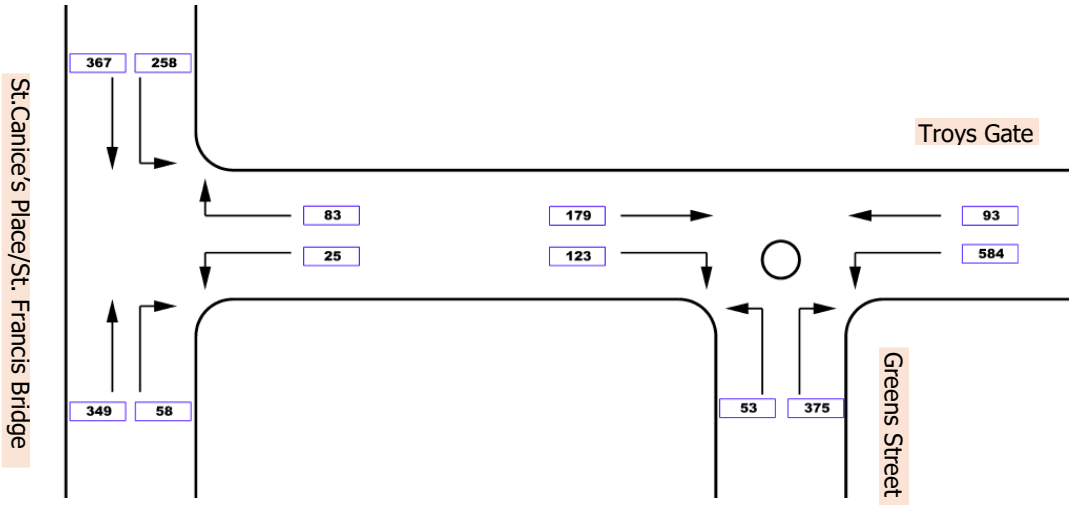

Figure 2.5 Average Peak PM Passenger Car Units on Vicar Street

3 NEED FOR AND OBJECTIVES OF DEVELOPMENT

3.1. Need for Development – Existing Infrastructure

The geometry of Vicar Street is not appropriate for the movements it carries.

Footways are narrower than the desirable minimum. There are no dedicated facilities for cyclists.

The existing carriageway width is at or below the desirable minimum for two-way traffic and so, if two-way traffic is maintained, there is no scope to increase footway width or introduce cycle facilities by reducing carriageway width.

The building-line is tight to the edge of footway and so there is no scope to increase footway width or introduce cycle facilities by widening the Street.

The geometry of the mini-roundabout at the northern end of Vicar Street leads to inappropriately high speeds through the junction and conflict between traffic movements.

The reserve lane on St. Canice's Place for traffic turning on to Vicar Street impacts on the efficient operation of the signalized junction at Irishtown by greatly reducing the queuing lane for straight through traffic at the Irishtown Junction and by causing increased levels of lane-swapping on approach.

The geometry of the Vicar Street / Troy's Gate / Green Street junction allows speeds that are not appropriate given the conflicting traffic movements that it facilitates and has no facilities for the safe movement of cyclists through the junction/.

The pavement and footways are in a poor condition and require improvement works.

3.2. Need for Development – Policy

The refurbishment of Vicar Street is important in isolation but also as a key enabler project for the Abbey Quarter.

It is an objective of the Kilkenny City and Environs Development Plan 2014 – 2020 to implement the provision of the Regional Planning Guidelines and to target the growth of Kilkenny City in a compact urban form to advance sustainable development and efficient transport links between employment and residential locations thereby facilitating easier circulation and mobility.

This urban form will place greater emphasis on the role of the central core in maintaining the vitality of the City. The concept of the ten minute city is that residents of the City can access city centre services within a ten minute walk or cycle from their homes.

3.3. Objectives of Development

The Objectives of the Development are:

- Provide improved facilities for pedestrians that allow for safe and comfortable use of Vicar Street by pedestrians and reduced conflict between pedestrians and residents of Vicar Street;
- Provide improved facilities for cyclists, to be segregated if possible;
- Improve the junction of Vicar Street and Troy's Gate / Green Street, making it safer for all road users;
- Reduce the impact of Vicar Street on the Irishtown Junction and the resulting queuing that occurs on St. Canice's Place;
- Maintain existing parking for residents of Vicar Street;

- Manage the particular constraints imposed by Vicar Street's location in the St. Canice's Architectural Conservation Area and in the Zone of Notification of Recorded Monuments in Kilkenny City.

The relevant standards for the Development ('Development Standards') are the Design Manual for Urban Roads and Streets and the National Cycle Manual.

4 PROPOSED DEVELOPMENT

4.1 CROSS-SECTION

Although there is a section of Vicar Street where the carriageway width increases such that parallel on-street parking is available, for most of its length Vicar Street is not wide enough to allow footways to be improved and cycle facilities to be provided while at the same time maintaining two-way flow for vehicles.

Therefore, if the objectives of improved pedestrian and cyclist facilities are to be provided, it is necessary to change Vicar Street from two-way flow for vehicles to one-way only. This allows the carriageway width to be reduced and the 'spare' width to be allocated to pedestrians and cyclists.

Even with this measure, there is not sufficient width for segregated cycleways on both side of Vicar Street that meet the requirements of the Development Standards. In situations where sufficient width is not available, the Development Standards recommend that segregated facilities are not provided.

To meet the Development objectives while also complying with the Development Standards, the typical cross-section shown in Figure 4.1 is proposed for Vicar Street. The principal features of this are:

- vehicular traffic flow will be allowed in one-direction only;
- cyclists travelling in the same direction as vehicular traffic will share the carriageway with vehicles. A segregated cycleway will be provided for the direction opposite to vehicular flow;
- footways will be provided on both sides of Vicar Street.

The distance between building lines increases at the northern half of Vicar Street. This will allow the incorporation of parallel-parking bays into the proposed cross-section at that location.

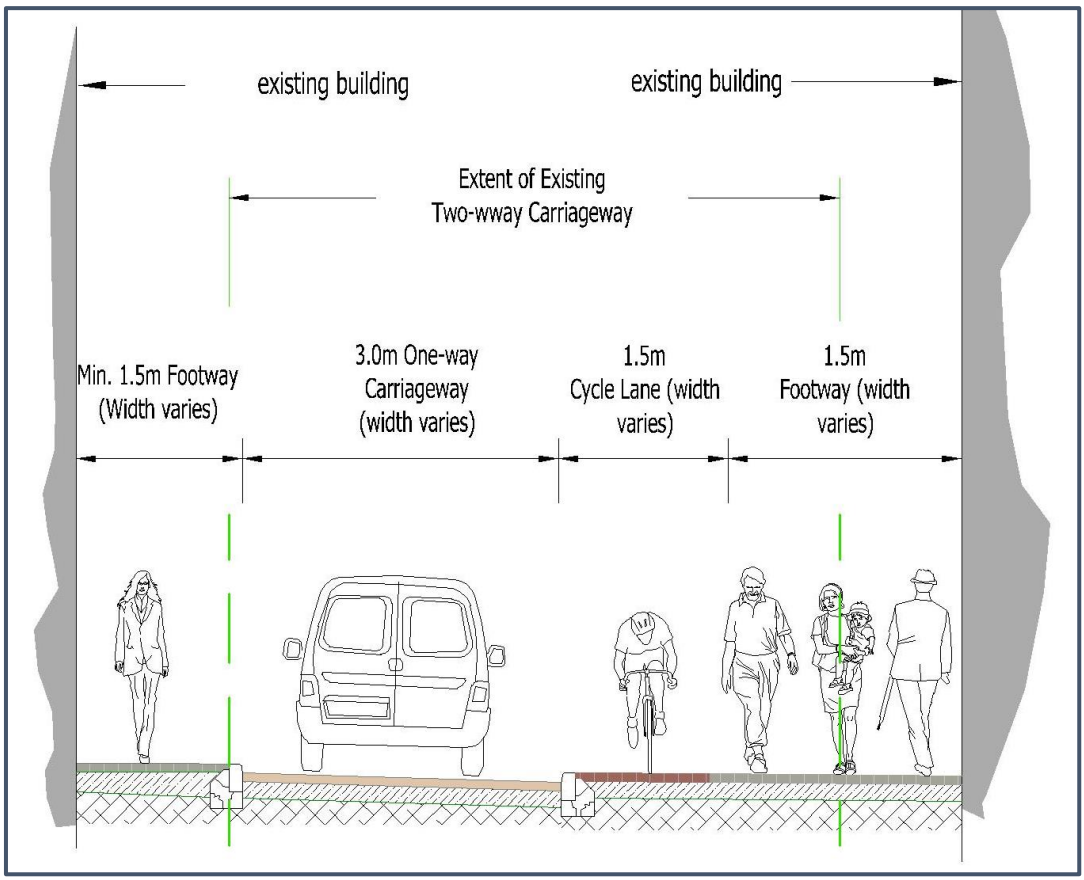

Figure 4.1 Proposed Typical Cross-Section for Vicar Street

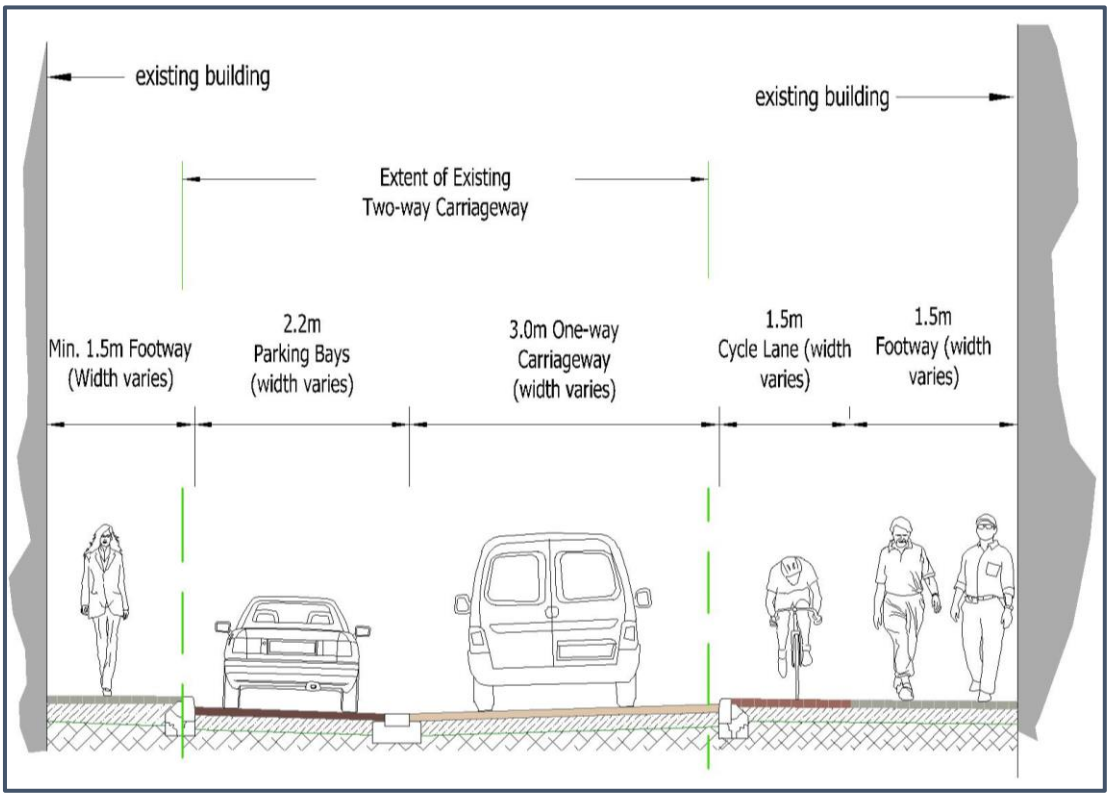

Figure 4.2 Proposed Typical Cross-section for Vicar Street with On-Street Parking

4.2 Direction of One-way Flow

Given that only one-way vehicular flow is possible, the choice must be made between prohibiting inbound or outbound flow for vehicles. The Development proposes prohibition of outbound traffic flows for the following reasons:

Ratio of Inbound to Outbound Traffic Flows

While outbound traffic flows are greater than inbound flows, approximately 40% (1,245) of outbound flows on Vicar Street turn right on to Green Street and towards Greensbridge. This traffic can reassign to Greensbridge via Greensbridge Street. Table 4.1 reproduces the existing traffic flows, in terms of Passenger Car Units (PCUs), recorded during the survey of May 2019 and also shows the traffic flows on Vicar Street that would apply if Greensbridge traffic reassigned to Greensbridge Street.

Table 4.1 shows that once the reassignment of Greensbridge Traffic is included, prohibition of outbound will impact on fewer vehicles.

	As-surveyed	Greensbridge Traffic Reassigns to Greensbridge Street
Inbound	2,254	2,254
Outbound	3,112	1,870

Table 4.1 Impact of Greensbridge Traffic reassigning to Greensbridge Street

Alternative Turning Movements

For inbound traffic approaching Vicar Street, the alternative is to reassign via Greensbridge, to Greensbridge Street, to St Francis Bridge and on to St. Canice's Place. This reassignment requires two right-turn movements, the first on to Greensbridge Street and the second on to St. Francis Bridge. For outbound traffic, the alternative is to reassign along the same route, however left-turn movements would be required. Left-turn movements at priority junctions are less disruptive to junction capacity and safer.

On-street parking

If the direction of traffic flow was made outbound, this would result in the inbound cycle lane running adjacent to the on-street parking. This leads to the risk of car doors opening into the path of cyclists.

If the direction of traffic is inbound, the cycle lane will be separated from the parking bays by the carriageway and so this hazard is eliminated.

Impact on Irishtown Junction

The westbound approach from St. Francis Bridge comprises two lanes from a point approximately 65m east of Vicar Street, through the Vicar Street Junction to the Irishtown/Dean St Junction. At present, the right-hand lane is reserved for traffic turning right on to Vicar Street, becoming a through lane for Dean Street only on the western side of Vicar Street (as shown in Figure 4.3). This greatly reduces the queuing lane for straight through traffic at the Irishtown/Dean St Junction. Queuing for approximately seven vehicles only can be accommodated in the existing through lane for Dean Street. Thereafter progression of left turning Irishtown traffic is restricted during green periods. This also causes increased levels of lane-swapping on approach to Irishtown Junction.

Figure 4.3 Two lane westbound approach (with 45m right-turn queuing lane for Vicar Street & 50m queuing lane for Dean Street west of Vicar St junction)

The automated traffic survey indicated the total average daily traffic approaching to the Irishtown/Dean St junction from both Vicar St and St Francis Bridge was 6,365 vehicles of which 4,504 (71%) proceeded to Dean St and 1,861 (29%) make a left turn, proceeding through to Irishtown.

Figures 4.4 to 4.6 below shows typical daily queuing west of the Irishtown Junction.

Prohibiting the outbound flow up Vicar Street will remove 663 daily right turn vehicle movements off St Francis Bridge (15% of the daily 4,402 westbound traffic) and allow the entire length of the right-turn lane east of the junction to be reassigned as a through lane for Dean Street traffic, thereby improving the traffic signal controlled junction capacity.

Figure 4.4 Queuing lane for straight through traffic (7nr. vehicles only) west of Vicar St junction

Figure 4.5 Queuing backs onto St Francis Bridge for Dean Street & Irishtown Traffic. Right-turn lane provides for just 15% of 4,402 daily westbound traffic

Figure 4.6 Typical Queuing on the Eastern Approach to Irishtown Junction

Figure 4.7 Lane swapping for through traffic to Dean Street in close proximity to Vicar Street & Irishtown junctions

4.3 VICAR STREET / TROY'S GATE / GREEN STREET JUNCTION

The development proposes replacement of the existing mini-roundabout with a priority junction that provides clearer definition of priority than is provided by the existing mini-roundabout. Pedestrian crossing facilities will be improved to satisfy the desire line from Riverside Drive to Vicar Street; these will also allow for safer movement through the junction by cyclists.

Figure 4.9 Existing low definition mini-roundabout at Vicar St/Troy's Gate/Green Street with limited pedestrian and cyclist crossing facilities

Figure 4.10 Existing low definition mini-roundabout allows vehicles pass on the wrong side of the island

Figure 4.11 Existing low definition encourage poor circulatory behavior

5 IMPACT OF DEVELOPMENT

The impact of the Development was considered under a number of factors.

5.1 ECOLOGY

An Appropriate Assessment Screening Report was carried out for the Development. The report concluded there would be no negative impacts on the surrounding environment once the Construction Management Plan is implemented and that Stage 2 Appropriate Assessment is not required.

5.2

The Architectural Heritage Impact Assessment report concluded that the works proposed will provide a beneficial impact on the existing buildings & structures and the St. Canice's Architectural Conservation Area. One house on Vicar Street was noted as being in a deteriorated condition and further specific study was recommended. Existing footpath levels are higher than the existing floor level and need to be considered to prevent further deterioration of the building.

5.3 ARCHAEOLOGY

The Archaeological Impact Assessment report concluded that while the Development will not affect any known archaeology, works in close proximity to several known archaeological sites may impact on subterranean archaeology, which has been found approximately 0.5m below ground level.

5.4 TRAFFIC AND TRANSPORT

Traffic Flows

An origin-destination survey was carried out as part of the traffic survey of May 2019. Figures 5.1 and 5.2 show the destination, in percentage terms, for outbound traffic on Vicar Street for the AM and PM peak respectively.

During the AM peak, 49% (527) of outbound traffic on Vicar Street assigns directly to the Freshford Road (i.e. and not to the Freshford Road via Granges Road). During the PM peak, the equivalent figure is 45% (498).

It is assumed that if the outbound flow on Vicar Street is prohibited, this traffic will reassign to the Freshford Road via Butt's Green and Granges Road. Figures 5.1 and 5.2 show the resulting increases in traffic flows on Dean Street and Grange's Road. Thus, for example, outbound traffic flow on Granges Road will increase by 16% in the AM peak and by 28% in the PM peak.

The impact of these changes will be that during AM and PM peaks, average vehicle delay will increase at the Butt's Green Roundabout and for traffic approaching Greensbridge on Greensbridge Street. The increase in delay will be offset by a reduction in average vehicle delay on the Freshford Road and on the New Road approach to Greensbridge. While necessary to the Scheme, it is recommended that consideration be given to the installation of traffic management measures on Green Street and Greensbridge Street to mitigate the impact of the increase in traffic.

The Scheme will greatly reduce traffic flows on Vicar Street and greatly improve facilities for pedestrians and cyclists. This will be a significant positive impact for residents, hotel guests and businesses on Vicar Street.

Irishtown Junction

As described in Section 4, prohibiting the outbound flow on Vicar Street will allow the entire length of the right- turn lane to be used as a through lane for Dean Street at the Irishtown Junction, thereby significantly improving its capacity and reducing queuing over St. Francis Bridge.

Vicar Street / Green Street / Troy's Gate Junction

The development proposes replacement of the existing mini-roundabout with a priority junction that provides clearer definition of priority than is provided by the existing mini-roundabout. This will provide a safer junction for all road users.

The Development will require the outbound City Bus service to be re-routed via Greensbridge Street and Greensbridge.

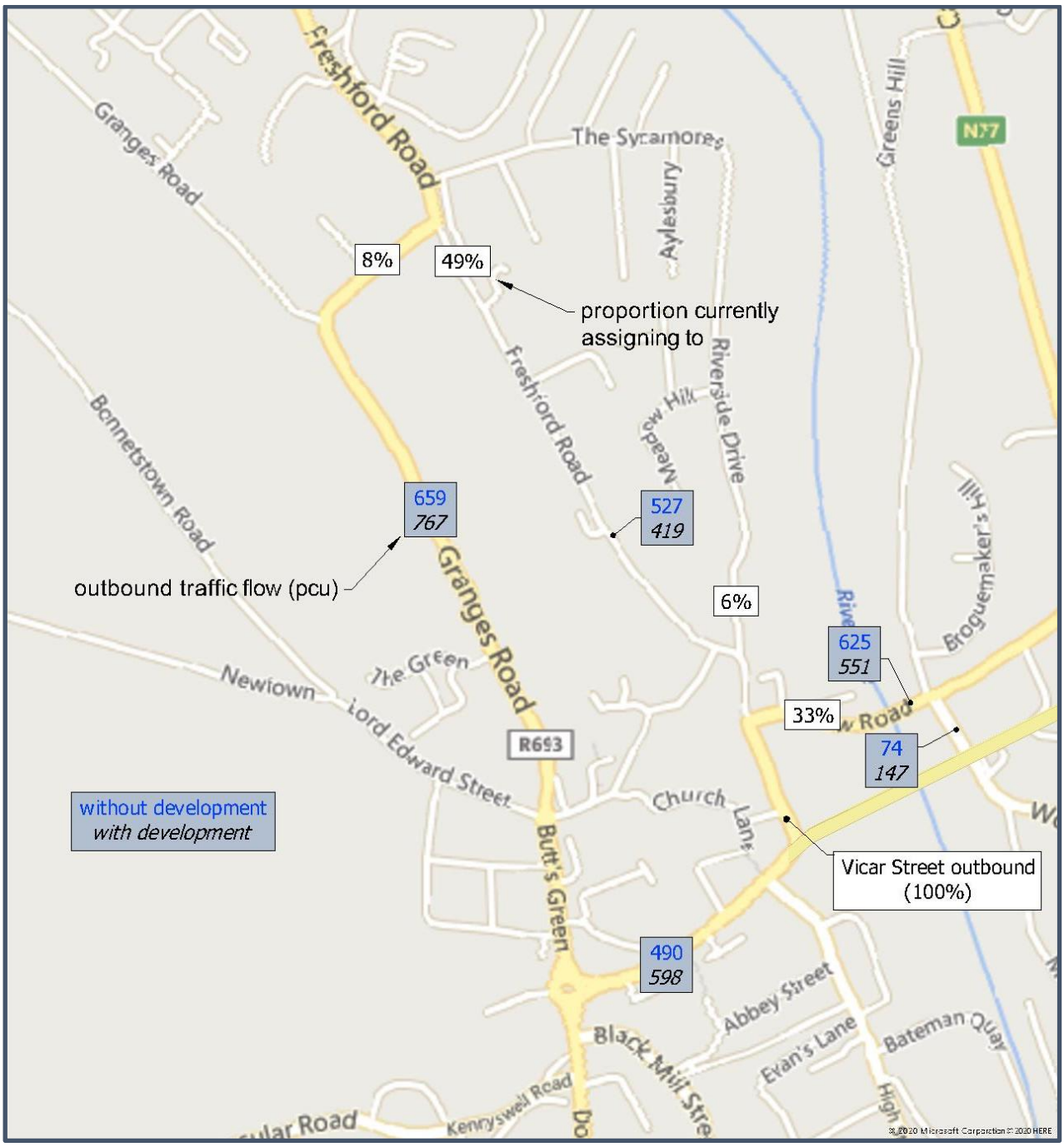

Figure 5-1 Traffic Impact AM Peak

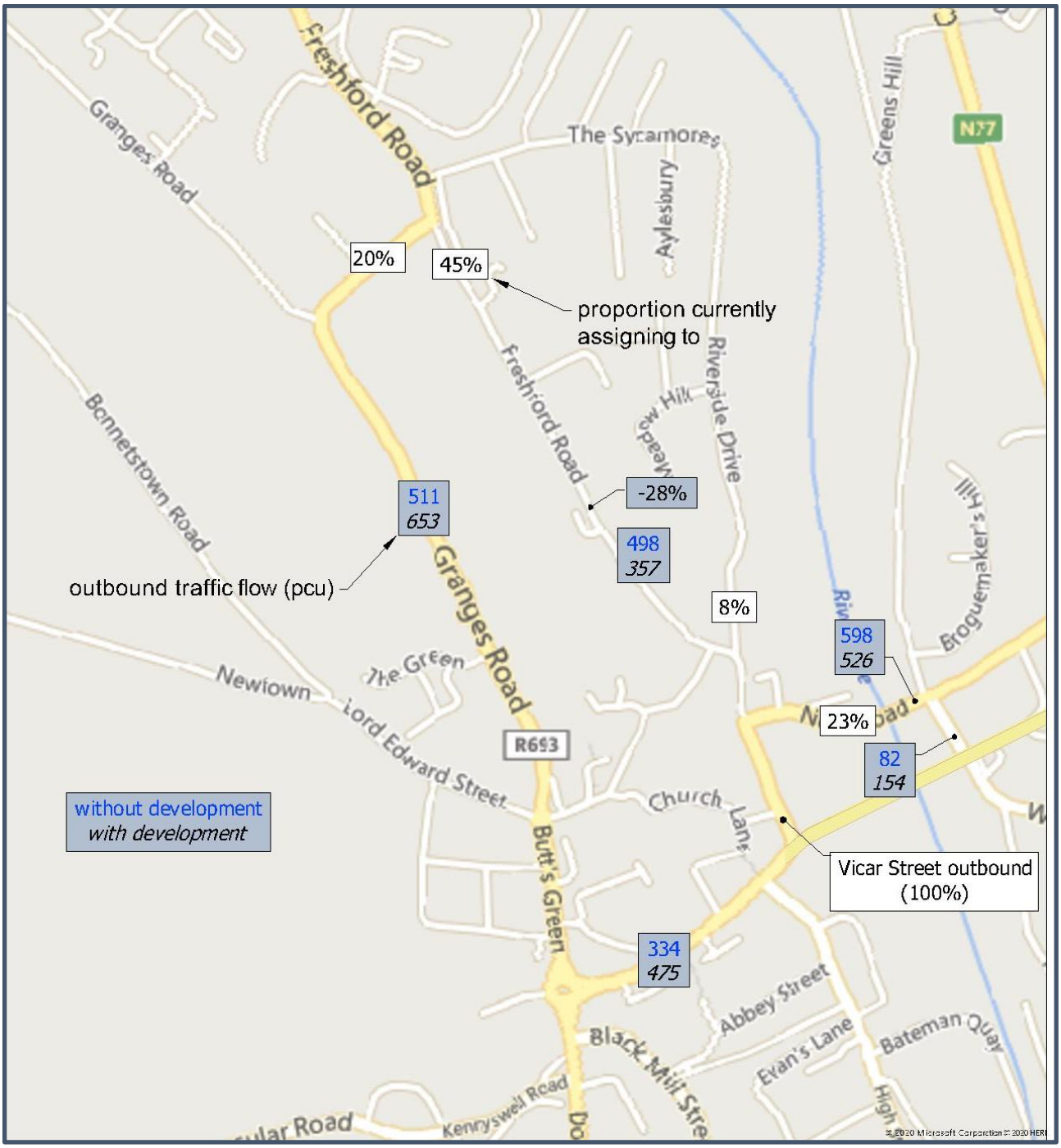

Figure 5-2 Traffic Impact PM Peak

6. LAND AQUISITION

6.1 LAND ACQUISITION

Acquisition of lands not in the public road is not required for the Development.

6.2 RIGHTS OF WAY

The Development will require extinguishment of the Right of Way for vehicles to travel outbound Vicar Street.

7. RATIONALE SUMMARY

The table below provides the rationale for the scheme outlining the advantages and implications of the particulars in the proposed development.

Advantages
1. Improvement to the public realm consistent with that phased throughout the city
2. Improved pedestrian safety with 1.5m footways on both sides of Vicar St serving private residences on Vicar St and the surrounding area, commercial businesses & recreational walkers.
3. Improved safety with pedestrian crossing provisions at junction of St. Canice's Place, Troys Gate and Greens Street.
4. Improved cycling facilities with a dedicated cyclelane and separation to on-street parking bays
5. Improved traffic management at the traffic signal-controlled junction at Irishtown/Dean St with increased length in queuing lane. Reduced turning manoeuvres at the junction of Vicar St and St. Canice's place/St. Francis Bridge.
6. Making Vicar Street one way inbound is more efficient to accommodate the AM peak traffic flows into the city
7. An overall reduction in traffic volumes on Vicar St. Discounting traffic that does not absolutely need to use Vicar Street, the inbound traffic volumes account for approximately 60% of the remaining traffic volume
8. Pavement improvement works to the deteriorated carriageway surface
9. Improved protection to the existing protected structures on Vicar Street with the increased separation distance to a single lane carriageway edge.

Implications
1. The outbound traffic on Vicar Street is marginally higher than inbound. However 40% of which turns right onto Greens Bridge as opposed to using St. Francis Bridge and may be attributed to historic driving habits
2. Outbound traffic will reassign to Greensbridge Street and Grange's Road resulting in increased traffic at Greensbridge St and Grange's Road
3. Low cost traffic management works anticipated on Greensbridge Street and Troys Lane
4. Alteration to KK2 city bus service route