A1

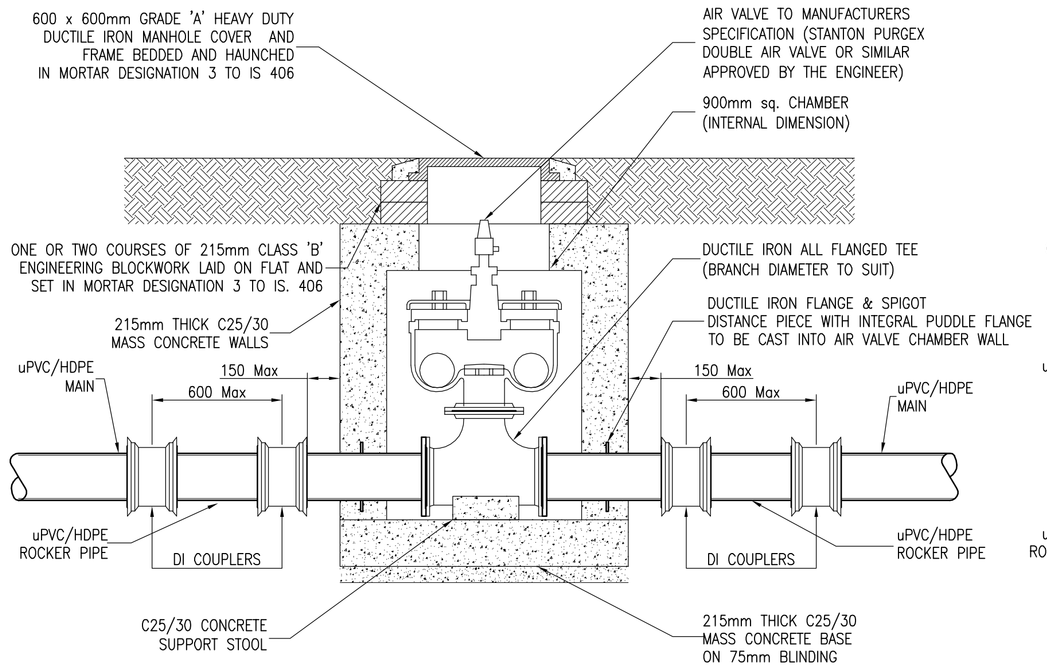

AIR VALVE CHAMBER

SCALE 1:20

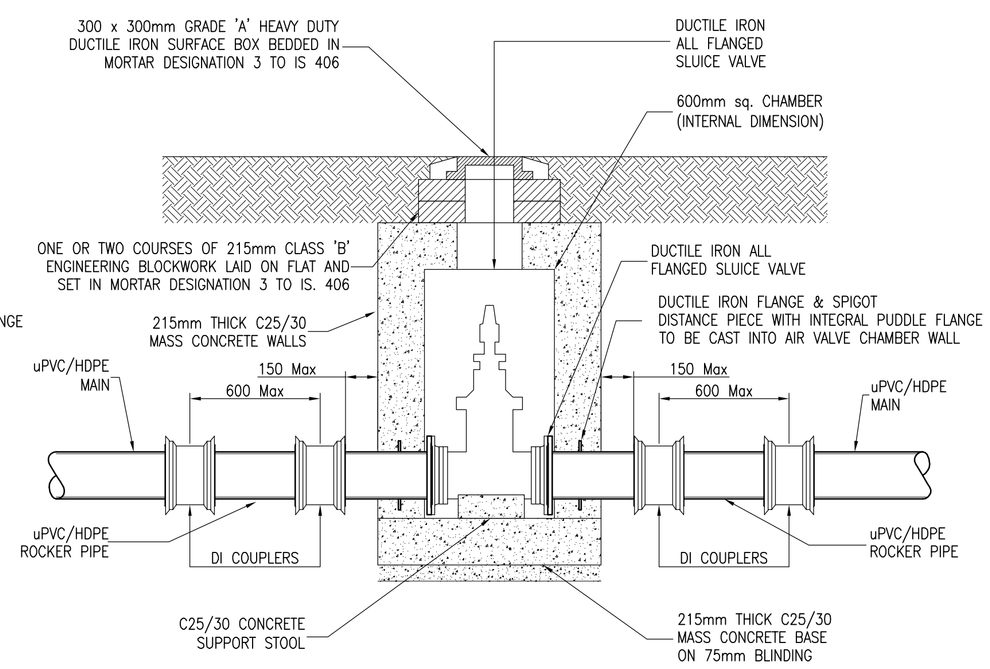

SLUICE VALVE CHAMBER

SCALE 1:20

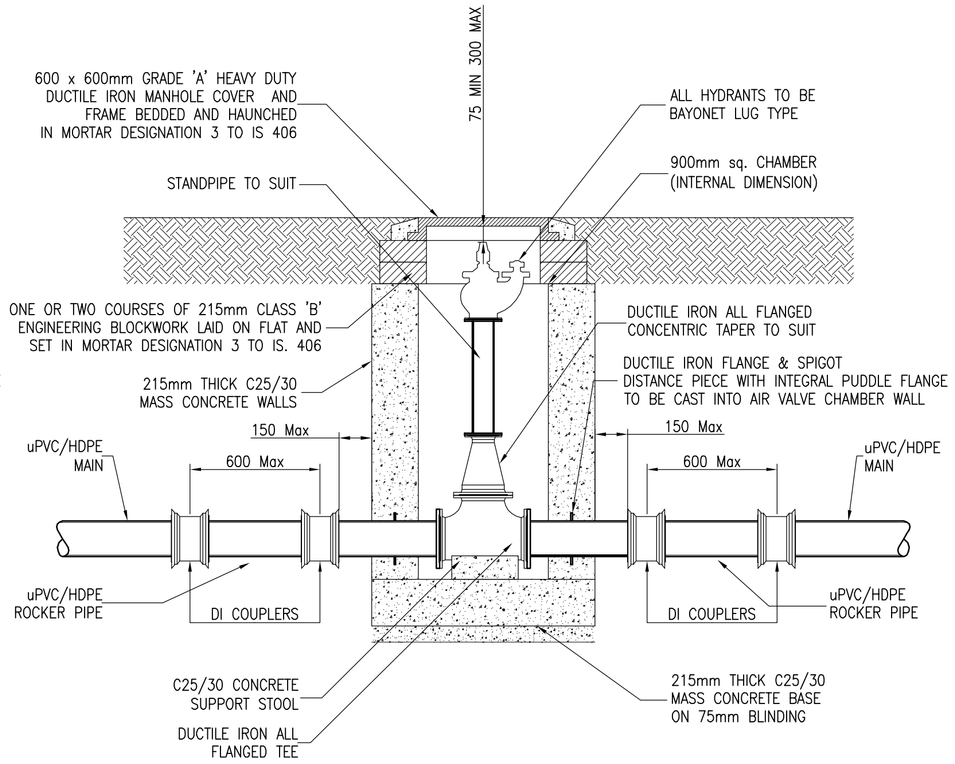

IN-LINE HYDRANT CHAMBER

SCALE 1:20

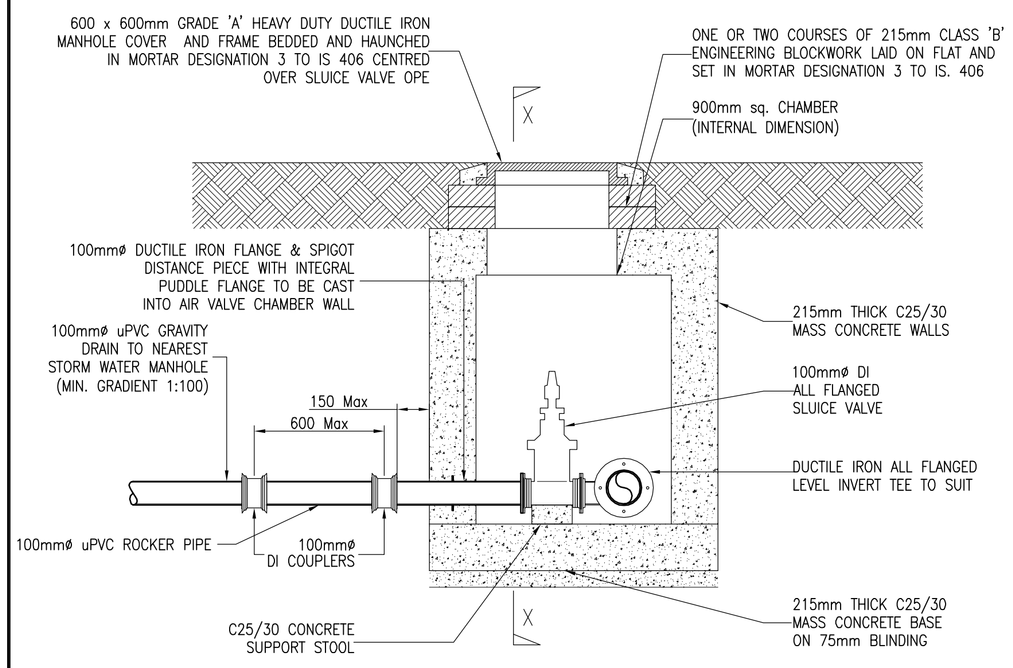

SCOUR VALVE CHAMBER

SCALE 1:20

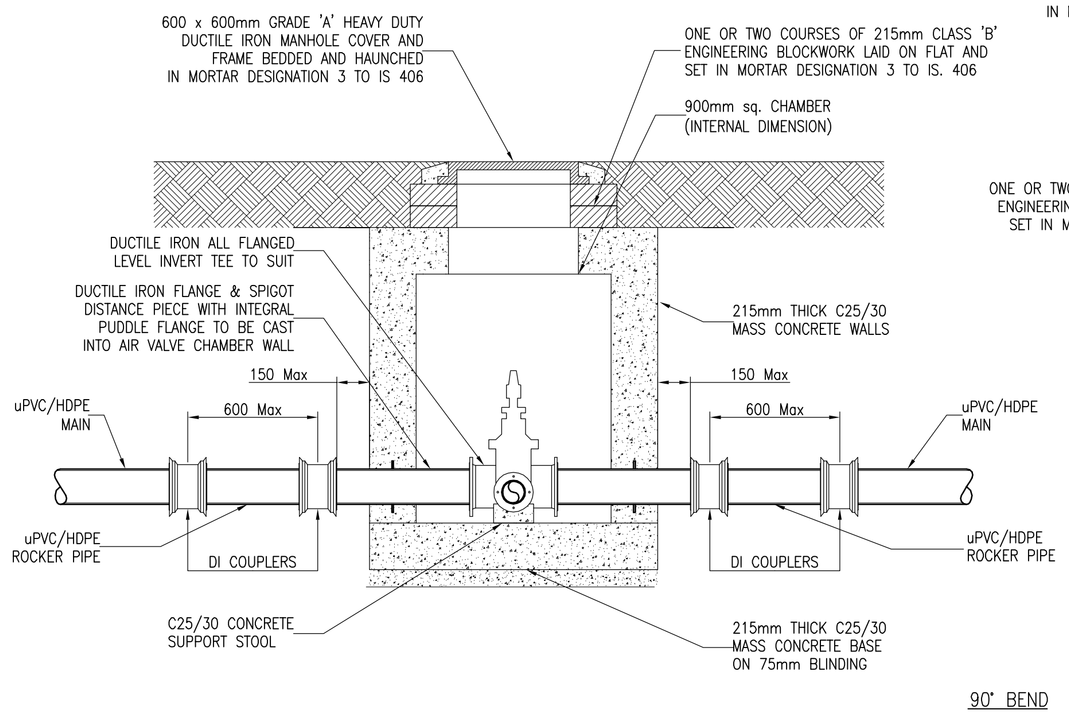

90° BEND

SECTION X-X THROUGH SCOUR VALVE CHAMBR

SCALE 1:20

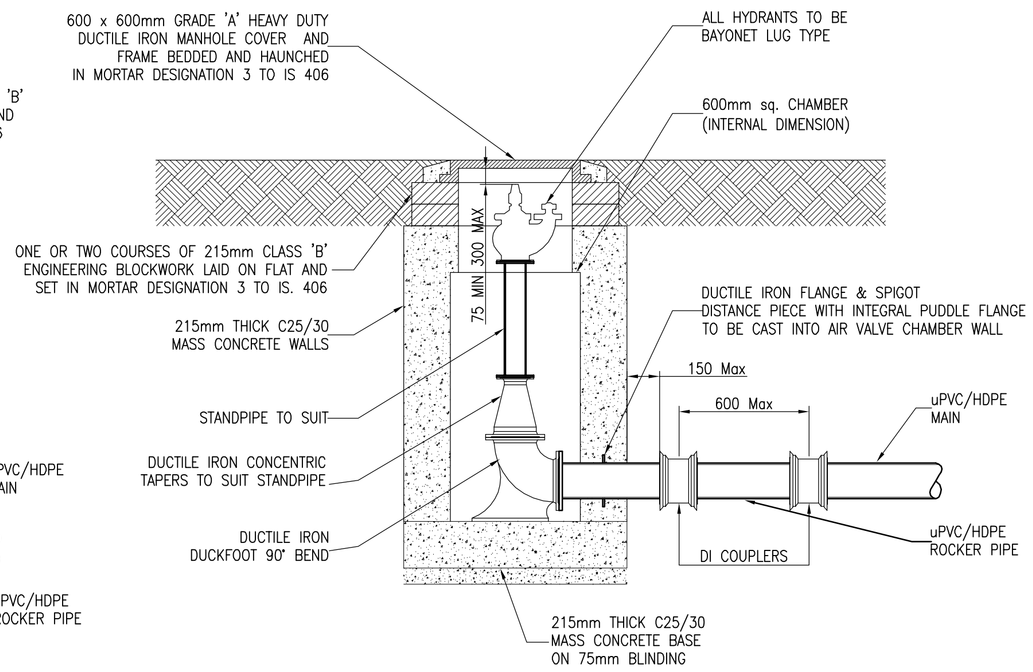

END OF LINE HYDRANT

SCALE 1:20

NOTES:

1. GRANULAR BEDDING TYPE B : SHALL CONSIST OF GRAVEL GRADED FROM 9.5mm TO 4.75mm, OTHER GRANULAR MATERIALS MAYBE USE SUBJECT TO APPROVAL.
2. ALL PIPES PASSING UNDER FOUNDATIONS & FLOORS SHALL BE HAUNCHED.

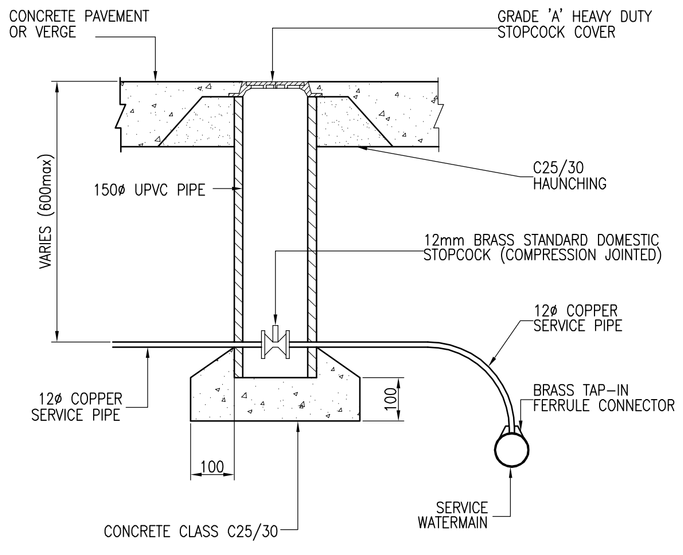

STOPCOCK CHAMBER

SCALE 1:20

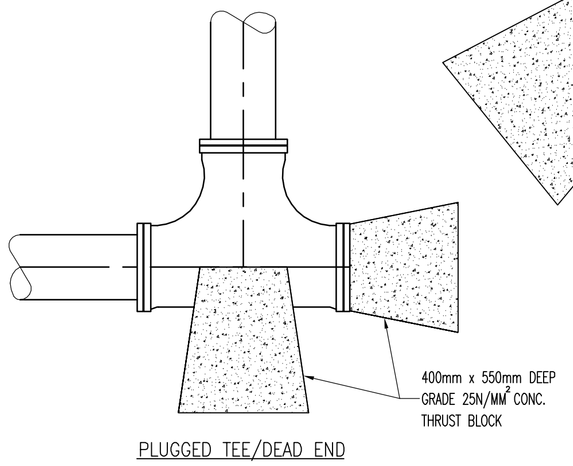

PLUGGED TEE/DEAD END

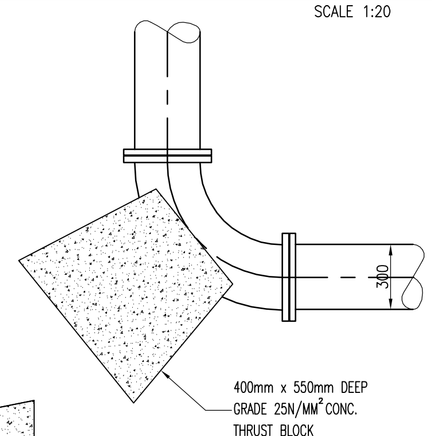

90° BEND

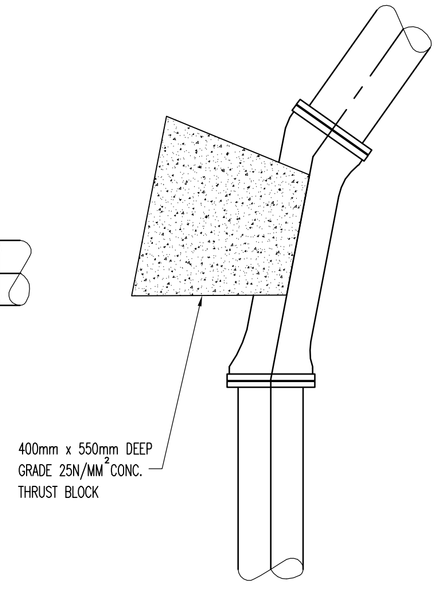

BENDS EQUAL TO/EXCEEDING 22.5°

TYPICAL THRUST BLOCK DETAILS

SCALE 1:20

GRANULAR BEDDING
FOR FLEXIBLE PIPES LAID ALONG ROADS & PAVED AREAS

GRANULAR BEDDING
FOR FLEXIBLE PIPES LAID THROUGH GRASSED AREAS

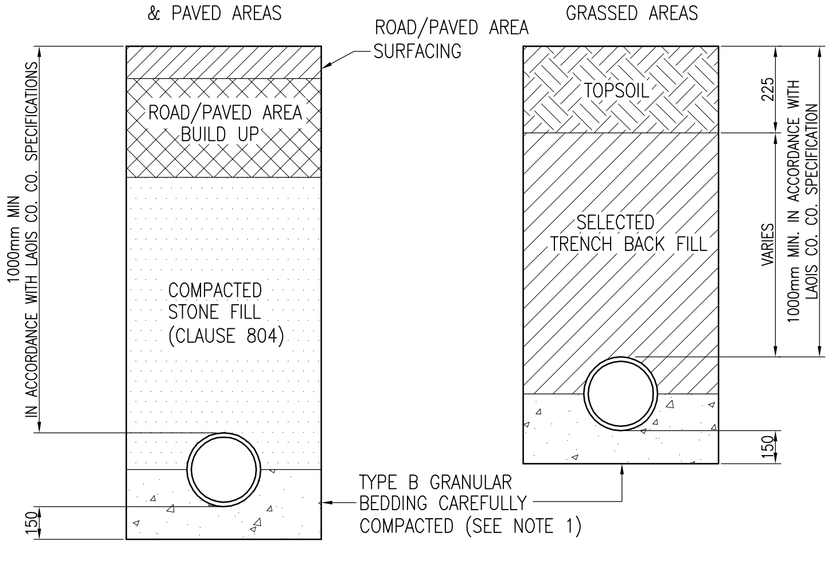

WATERMAIN BEDDING DETAILS

SCALE 1:20

NOTES:

GENERAL NOTES:

1. THIS DRAWING TO BE READ IN CONJUNCTION WITH ALL RELEVANT ARCHITECTS, SERVICE ENGINEERS DRAWINGS & SPECIFICATIONS.
2. ALL LEVELS ARE STRUCTURAL UNLESS NOTED OTHERWISE.
3. ALL WORKS TO BE CARRIED OUT IN ACCORDANCE WITH THE RELEVANT BUILDING REGULATIONS.
4. DO NOT SCALE – WORK TO FIGURE DIMENSIONS ONLY.

QUALITY ISO 9001:2000 NSAI Certified

ENGINEERS IRELAND cpd ACCREDITED COMPANY

Referenced drawings

Dwg. No.	Dwg. Title

Issue register

Rev.	Date	Description	Dwn.	Chkd.	Appvd.
PL1	24.11.16	PLANNING ISSUE	PF	PF	NP

Client: KILKENNY COUNTY COUNCIL

Job Description: SOCIAL HOUSING UNITS AT BOLTON, CALLAN, Co. KILKENNY

Status: PLANNING

Drawing Title: EXTERNAL DETAILS SHEET 4

Project No:	Drawing Ref:	Rev:
16KK030	C-053	PL1

Date:	Scale:
25.10.16	AS SHOWN

Drawn By:	Checked By:	Approved By:
P.FUNCHEON	P.FUNCHEON	N.PATTERSON

Hayes Higgins Partnership
Gas House Lane, Kilkenny.
Gas House Lane, Kilkenny (056) 7764710 (056) 7723223 info@hayeshigginsk.com
58 Fitzwilliam Square, Dublin 2. (01) 6612331 (01) 6625804 admin@hayeshiggins.ie

CADFILE: 16KK030-C-053 External Details Sheet 4.dwg

© HAYES HIGGINS PARTNERSHIP